Struers
Ensuring Certainty

DEEP DIVE INTO LABOTOM-20

Tests, data and proofs

FAST MANUAL CUTTING OF ANY WORKPIECE

Labotom-20 is a simple-to-use and powerful table-top cutting machine for a wide range of cutting needs. Sturdy and reliable, it ensures maximum uptime and can be used by any operator to section workpieces quickly and efficiently.

- **Optimize process time** with highly efficient setup and operation
- **Experience high flexibility** with one solution for different workpiece sizes, shapes and materials
- **Increase the quality of each cut** with more controlled sectioning
- **Minimize downtime** with integrated cleaning and minimal maintenance
- **Ensure employee health** with an ergonomically designed solution

Reduce cutting time by

50 %

compared to equivalent automatic cutting machines*

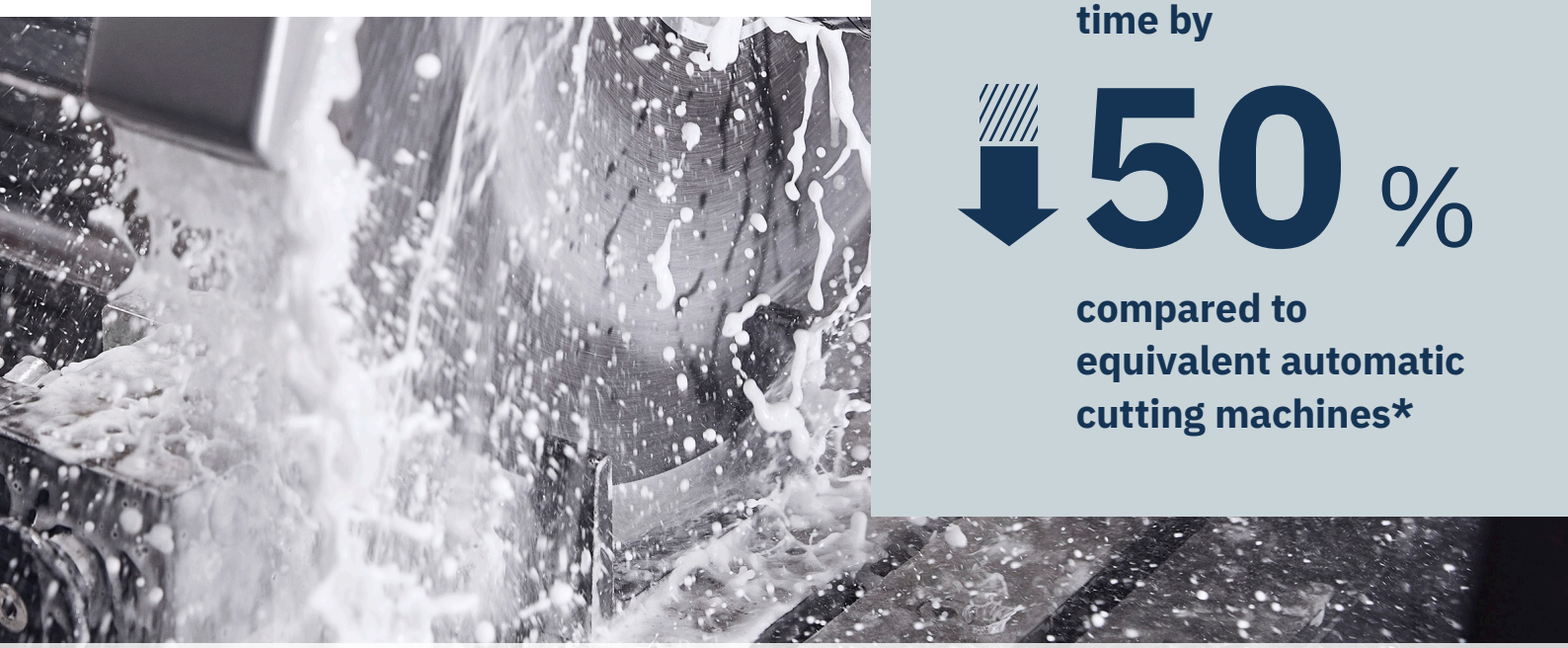

** Controlled testing shows that the faster feed speed, shorter positioning time and quicker setup with Labotom-20 reduces cutting time compared to automatic cutting machines. However, automatic cutting machines ensure greater repeatability and less cut-off wheel wear and no operator intervention after setup and positioning.*

Section any workpiece, fast

Labotom-20 is a flexible cutting machine with a large cutting table and versatile 350 mm / 14” diameter cut-off wheel. This means you can section a wide range of workpieces up to 110 mm in diameter, with differing shapes, sizes, complexities and materials. The sliding safety guard enables you to access the cutting table from three angles, so you can position and maneuver large or odd-sized workpieces with ease.

Cutting capacity

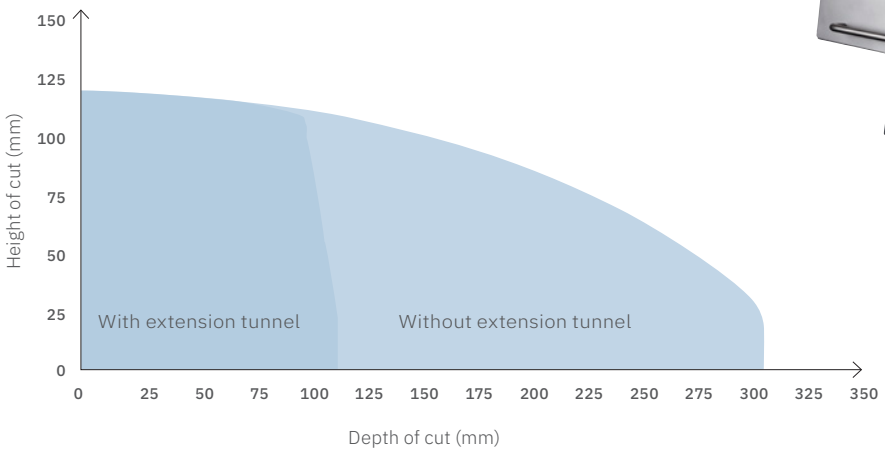

With extension tunnel options on both sides, you can section extra-long workpieces.

Workpieces cut in less than three minutes

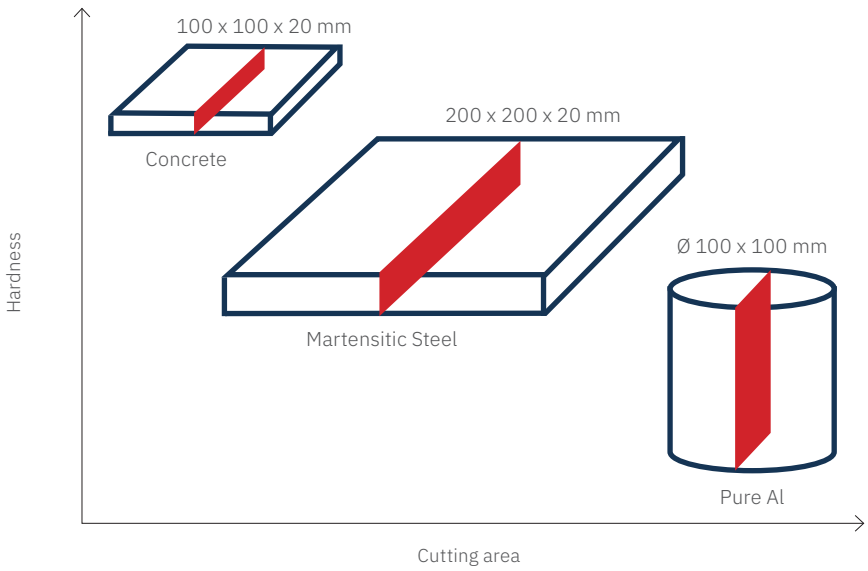

As well as the size of the workpiece, cutting capacity also depends on the hardness and cutting area of the workpiece.

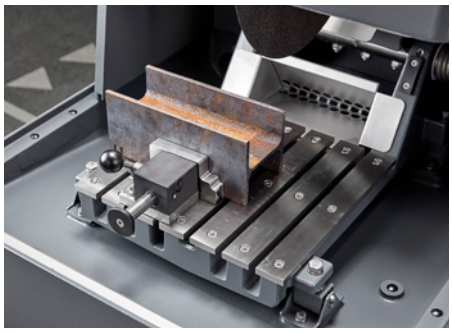

The large cutting table has 10 mm T-slots for high flexibility. This means you can quickly clamp small, large or odd-shaped workpieces.

Save time with cut-and-go efficiency

With Labotom-20, any operator can section workpieces quickly and efficiently with minimal training. Setting up a cut is fast and simple. No programming is required and there are just three buttons: Start, Stop and Flush.

To further increase efficiency, the specimen collector catches cut specimens, so the operator does not spend time trying to find them.

Increase efficiency by eliminating incorrect cuts

Labotom-20's cutting chamber is very well illuminated and there are guiding lines on the cutting table to make workpiece alignment fast and simple. To reduce the risk of operator error, an integrated laser previews each cut. There are also guiding lines on the safety guard to enable better operator control. In addition, the advanced design of the fixed cooling nozzles ensures optimal cooling, even as the cut-off wheel becomes smaller through use, which reduces the risk of burns.

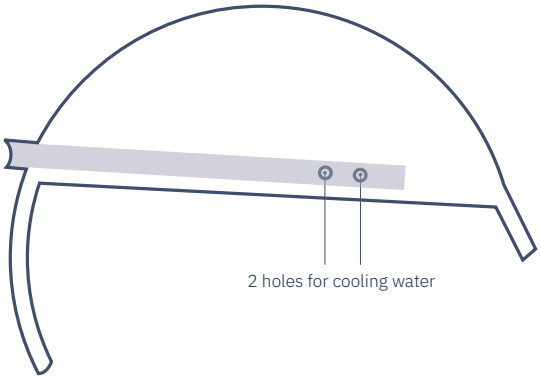

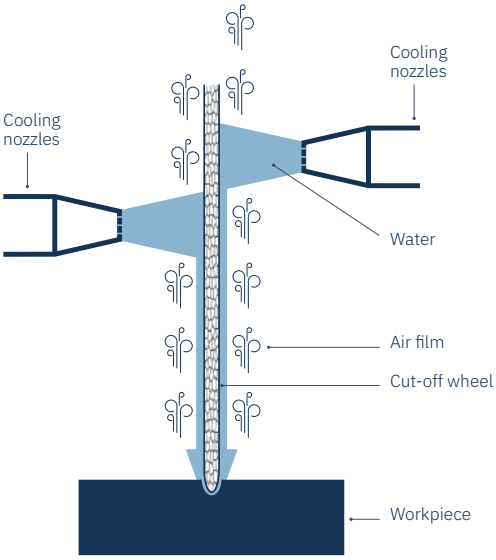

The two cooling nozzles on either side of the workpiece ensure that cooling water penetrates the air film around the cut-off wheel to effectively cool the workpiece in the cutting area.

Reduce cleaning time between cuts

Labotom-20 includes an integrated and adjustable flushing gun for cleaning between cuts. There is a big drain with a smooth sloped surface to ensure it is easy to wash away debris. This makes cleaning between cuts faster.

The integrated AxioWash cleaning function can be used to thoroughly clean the cutting chamber.

Ensure employee health with an ergonomic cutting solution

Labotom-20 has been ergonomically designed to reduce strain on the operator. The sliding safety guard ensures the correct movement when closing and opening, with arms close to the body.

The smooth movement of the cutting handle gives greater control during sectioning.

Minimize downtime with robust design

Thanks to its robust design and engineering, maintenance of Labotom-20 is fast and simple. Done regularly, this maintenance will extend the lifetime of the machine for a higher long-term return on investment.

The base of the machine is made of cast aluminum to ensure maximum durability and a long lifetime. The motor console and cutting table are cast in one piece to increase stability during operation.

Save water to improve your environmental performance

With the addition of an optional recirculation unit, cleaning and flushing water is continually reused within the system. This means no tap water is required, which reduces your water consumption and improves environmental performance.

Save

50 liters

of tap water per cut with a recirculation cooling system

Increase efficiency with clamping tools and consumables

Labotom-20 works perfectly with Struers' wide range of cutting consumables and clamping tools to ensure you have better control of the cutting process. This gives you a cutting solution that is optimized for high efficiency.

Struers' long-lasting cut-off wheels improve cutting quality. When using Struers' cut-off wheels and cutting fluids – which serve as a cooling, lubrication, corrosion protection, and bacteria prevention media – your cut-off wheels will last even longer. In addition, Struers provides a complete range of clamping tools, including customized clamping solutions, that can be used to clamp any workpiece. These can quickly be placed in Struers' T-slots for a faster turnaround time and more efficient cutting process.

To find out more about Struers' clamping tools and cutting consumables, visit Struers.com.

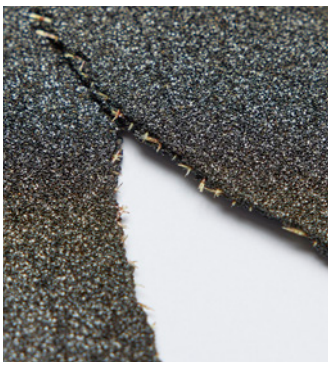

Struers provides an abrasive 350 mm / 14" diameter cut-off wheel designed specifically for manual cutting equipment. The aluminum oxide wheel is reinforced, which makes it less likely to break due to operator error. As a result, the cut-off wheel lasts longer, reducing your consumption of consumables.

2024.v1

Ensuring certainty

Materialographic preparation and testing demands consistent, reproducible results. These come not only from your laboratory process, operators and equipment, but from your supply chain and your partner. As a Struers customer you benefit from high quality design and engineering of equipment and consumables, but just as much from our unique knowledge base, robust global supply chain, and expert service and applications support – where and when you need it. We call all this ensuring certainty

Struers remains dedicated to making the world a better place through the pursuit of deep scientific insights and ground-breaking technology. Today, we're your trusted partner in a fast-changing world, sharing our expertise and practical experience on a global scale. This gives you innovative solutions that help you face the future with confidence. We continue to lead the way in materialographic products and services, and to shape future developments towards a better society.

www.struers.com

Struers
Ensuring Certainty